Ekka

TM

Ekka windows

Your Vision Our Frame

COMPLETE GUIDE TO FENESTRATION COMPONENTS

www.myekka.com

SMART SOLUTION FOR

SMART SPACES




NATURAL STONE FINISH
PREMIUM & TIMELESS
CANTILEVERED VOLUME
CLEAN LINES, MODERN AESTHETIC
VERTICAL FIN DESIGN
ADDS CHARACTER
ALUMINIUM PERGOLA
SHADE WITH STYLE
GLASS BALUSTRADE
UNOBSTRUCTED VIEWS
A MORE OPEN FEEL
TERRACE GARDEN
A GREENER LIFESTYLE
SEAMLESS INDOOR-OUTDOOR
LIVING SPACES
NATURAL LIGHT ALL DAY
LARGE SLIDING DOORS
FOR WIDER OPENINGS
REFLECTING POOL
A CALMING ELEMENT
LANDSCAPE INTEGRATION
BLENDS ARCHITECTURE & NATURE

Ekka

Ekka windows

Your Vision Our Frame



ABOUT US

At Ekka Fenestration, we deliver high-quality aluminium windows and doors for modern spaces. Founded in 2025, we combine durability, style and precision to enhance residential and commercial environments.

With over a decade of industry experience, our founders **Mr. Himanshu Gupta** and **Mr. Anand Gupta** bring deep expertise from their successful ventures in hardware and fenestration solutions, ensuring every product meets the highest standards of quality, performance and design.

OUR MISSION

To deliver innovative, durable and premium fenestration solutions that enhance modern living and working spaces, while ensuring quality, customer satisfaction and long-term value.

OUR VISION

To be a trusted and leading name in fenestration solutions, recognized for excellence in design, performance and customer experience, creating brighter and more beautiful spaces for the future.

INDEX

01 | Ekka Vista Minimal Slim System

02 | Ekka Ultra Minimal Slim System

03 | Ekka Elite Gulf Slim System

04 | Ekka Retro Gulf Slim System

05 | Eco Gulf Slim System

06 | 29 MM Euro Slim System

07 | 25 MM Euro Slim System

08 | Ekka 40 Casement Window

09 | Ekka 50 Casement Door



Ekka windows
Your Vision Our Frame

SLIMMER
FRAMES
BIGGER
POSSIBILITIES

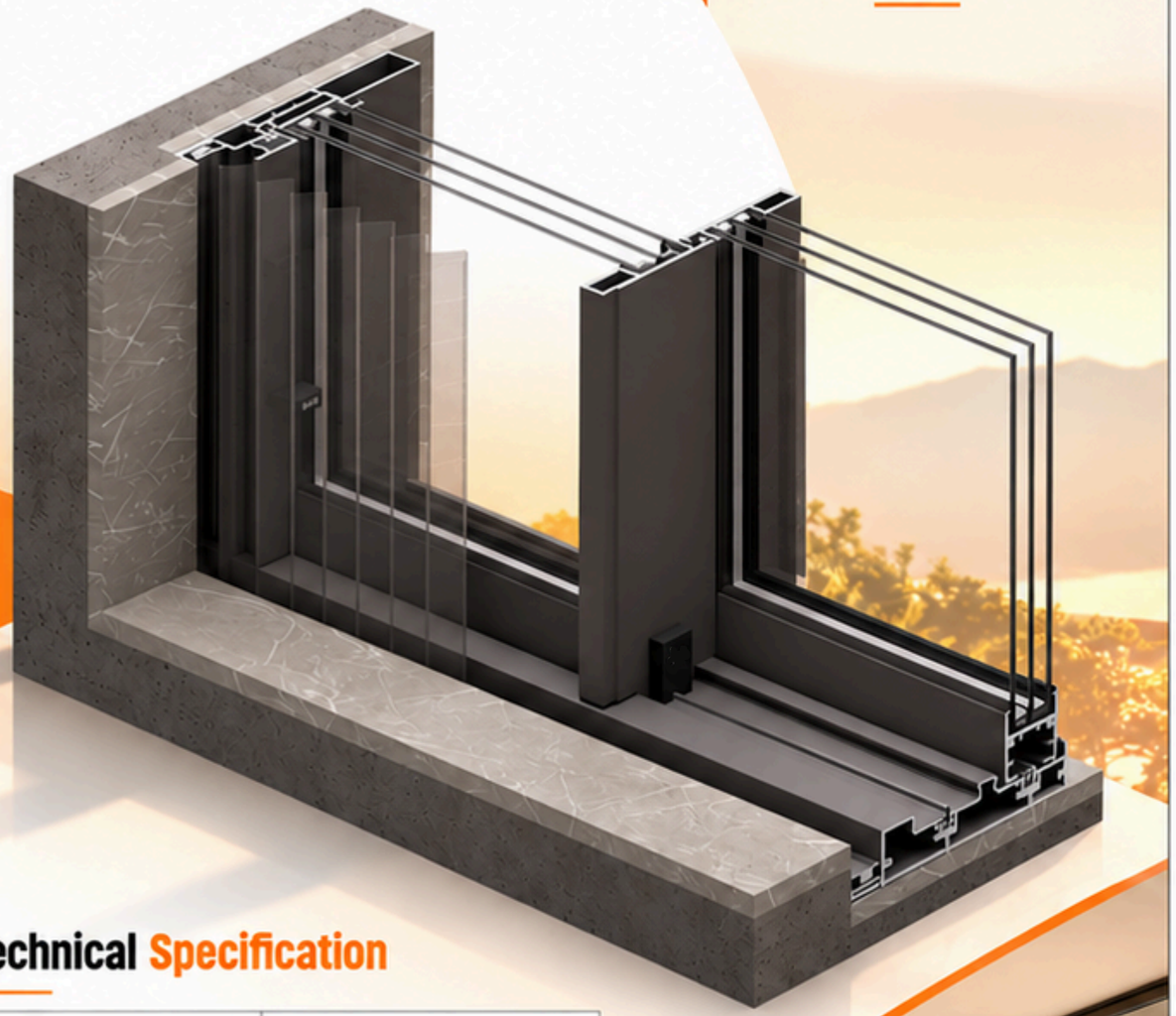

Technical Specification

2 Track Frame Width:	150 MM
3 Track Frame Width:	217 MM
Frame Height:	31 MM
Interlock Sightline:	17 MM
Glass Thickness:	12 MM To 32 MM
Max. Shutter Height:	5400 MM
Max. Shutter Width:	3000 MM
Locking Type:	Multi Locking (Top-Bottom)
Mosquito Net:	Pleated
Roller Capacity:	Up to 300 kg



Vista Minimal Slim System

Vista Slim – Where Architectural Vision Meets Uncompromising Luxury.

Introducing the Vista Slim Sliding System, a truly bespoke solution crafted for those who demand nothing less than perfection. This next-generation range is engineered for an elite clientele, offering an unparalleled canvas of light and view. Our commitment to slimmest sightlines means the robust, precision-engineered frame virtually disappears, leaving an expansive, crystal-clear experience that blurs the lines between indoor comfort and the grandeur of the outdoors.

Beyond its aesthetic appeal, the Vista Slim boasts flawless, silent operation and exceptional durability, constructed from the finest materials to ensure lasting elegance and security. Choose the Vista Slim Silding Window to transform your space into an extraordinary sanctuary of light, openness, and sophisticated living.

- **Ultra Slim Sightlines**
- **Premium Aesthetics**
- **Silent Operation**
- **Durability & Security**

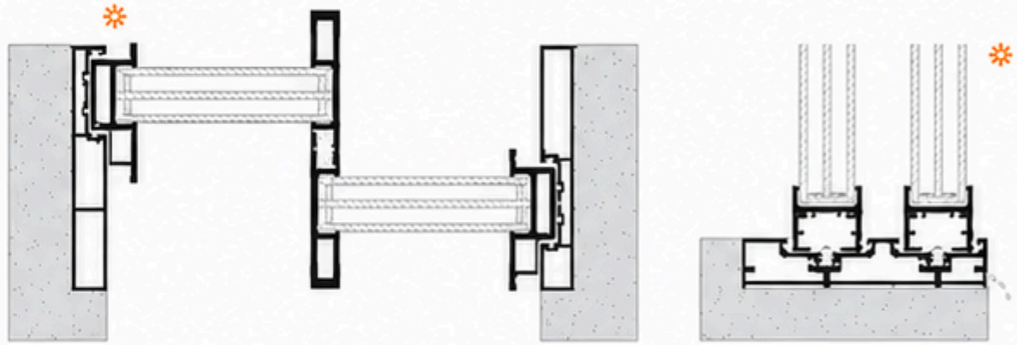

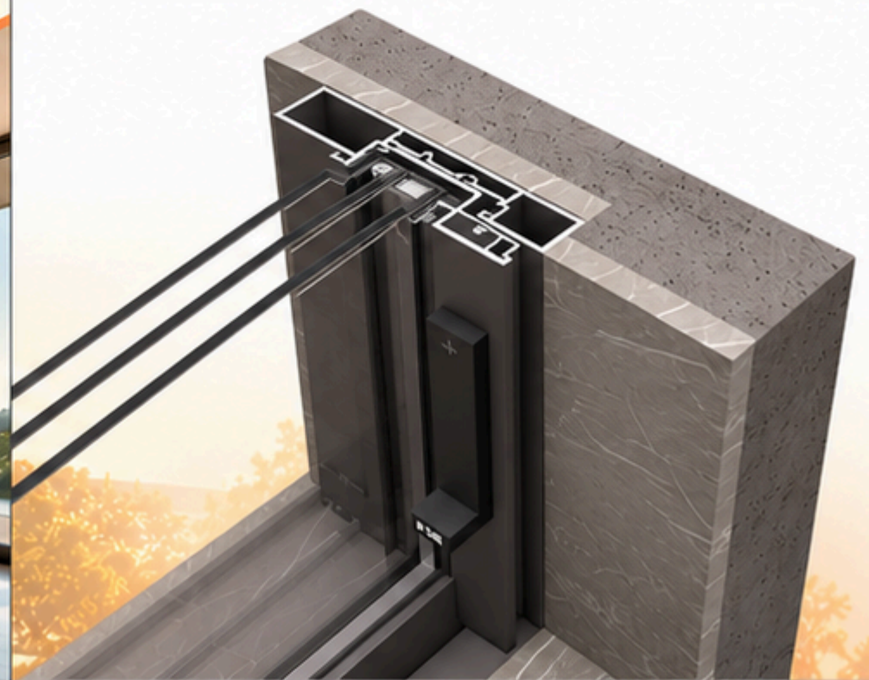

DESIGNED
FOR A
BRIGHTER
FUTURE

Ultra Minimal Slim System

Redefining Transparency: Our Ultra Slim System steps into a new dimension of architectural brilliance. Designed to deliver the ultimate in minimalist aesthetics, these windows feature profiles so incredibly narrow, they virtually disappaer, creating a stunning effect of pure, uninterrupted glass. Experience an unprecedented influx of natural light and breathtaking, panoramic views that seamlessly merge your indoor and outdoor living spaces. Perfect for contemporary homes and avant-garde designs, these windows embody modern sophistication, offering a truly invisible barrier that elevates your property with unparalleled elegance and openness.

- Ultra Slim Sightlines
- Premium Aesthetics
- Silent Operation
- Durability & Security

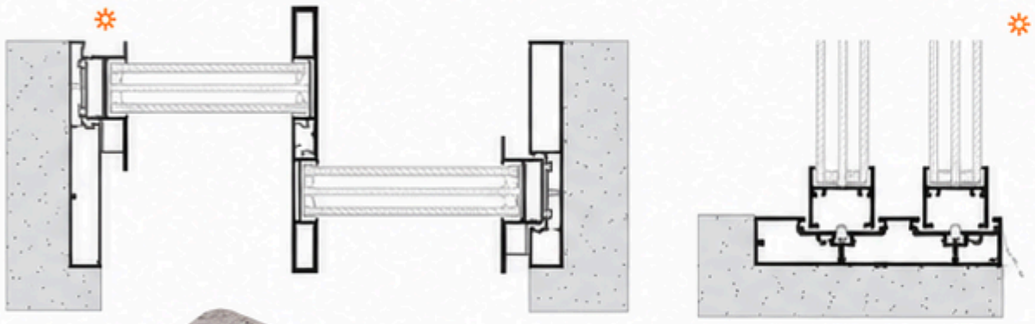



DESIGNED FOR A **BRIGHTER FUTURE**





Technical Specification

2 Track Frame Width:	118 MM
3 Track Frame Width:	173 MM
Frame Height:	28 MM
Interlock Sightline:	19 MM
Glass Thickness:	5 MM To 20 MM
Max. Shutter Height:	3600 MM
Max. Shutter Width:	2000 MM
Locking Type:	Multi Locking (Top-Bottom)
Roller Capacity:	Up to 250 kg

Elite Gulf Slim System

Unyielding Strength, Uninterrupted Views.

Our Elite Gulf Heavy Duty Slim System is engineered for projects demanding the ultimate in performance and elegance. Designed to withstand the rigorous demands of large openings and challenging environments, these windows offer exceptional durability and resilience while maintaining ultra-slim sightlines. Ideal for high-end residences, commercial complexes, and luxury developments, the Elite Gulf system delivers superior strength, smooth operation, and a sophisticated design that creates uninterrupted views with lasting impression.

- Ultra Slim Sightlines
- Premium Aesthetics
- Heavy Duty Performance
- Durability & Security

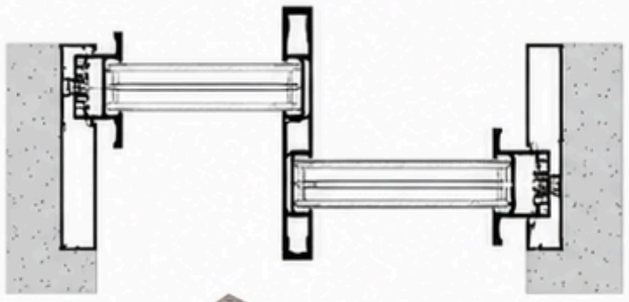

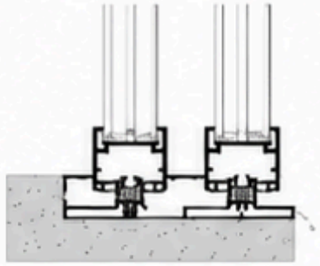



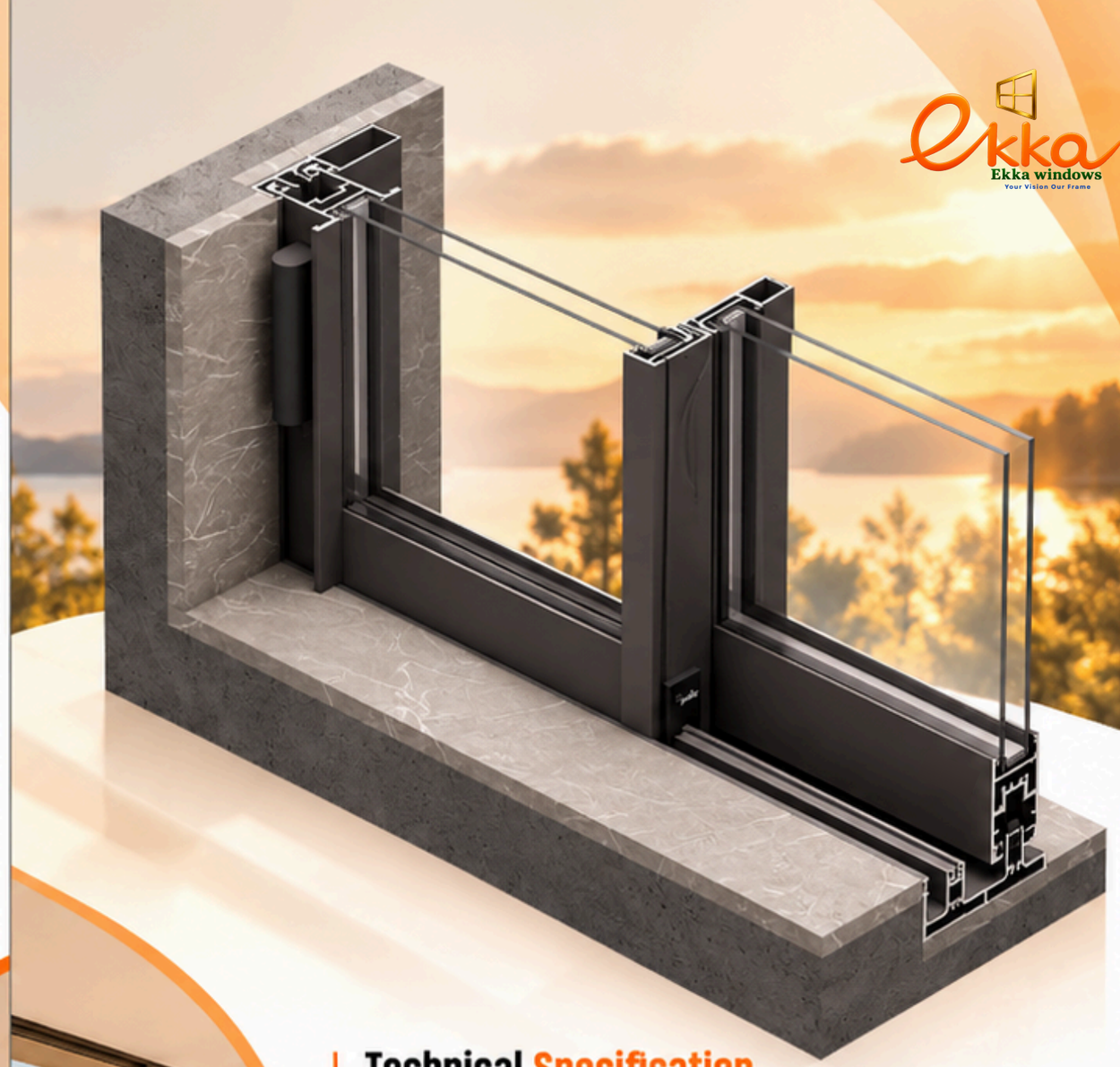



Technical Specification

2 Track Frame Width:	**108 MM**
3 Track Frame Width:	**161 MM**
Frame Height:	**41 MM**
Interlock Sightline:	**21 MM**
Glass Thickness:	**10 MM To 28 MM**
Max. Shutter Height:	**4000 MM**
Max. Shutter Width:	**2100 MM**
Locking Type:	**Single / Multi Point Locking**
Mosquito Net:	**In Shutter**
Roller Capacity:	**Up to 250 kg**

Retro Gulf Slim System

Embrace timeless charm with our Retro Gulf Slim System. Inspired by the rich architectural heritage of the Gulf region, this system seamlessly blends vintage aesthetics with modern functionality. Meticulously crafted with slim aluminium profiles, the Retro Gulf Slim System evokes the distinctive charm of traditional Gulf design while offering a unique visual appeal that stands out. Experience the perfect fusion of nostalgic beauty and durable, low-maintenance performance, bringing a touch of sophisticated, old-world character to your contemporary space.

Timeless Aesthetics | **Slim Profiles** | **Modern Functionality** | **Durability & Low Maintenance**

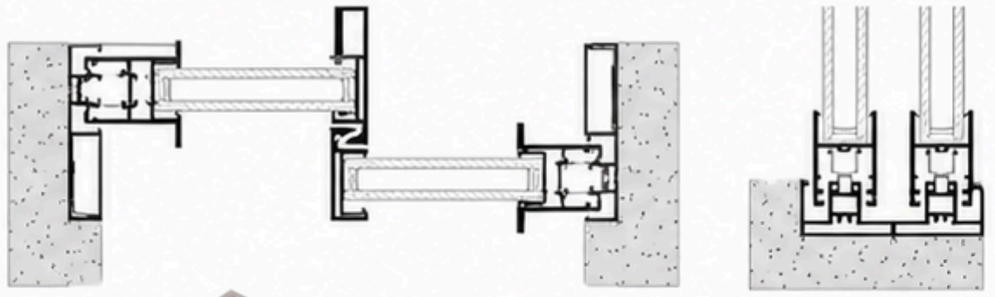





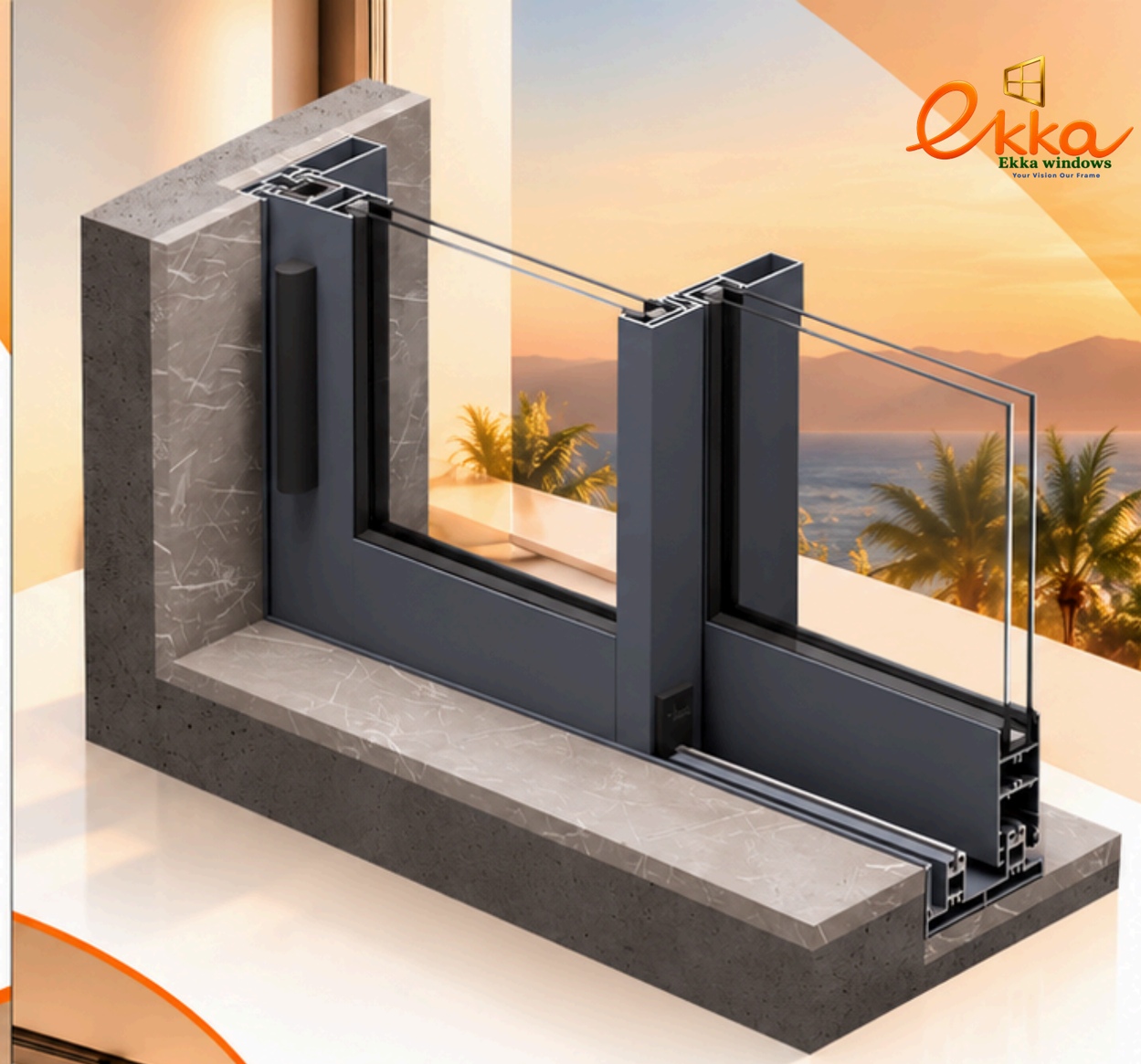

Technical Specification

2 Track Frame Width:	**100 MM**
3 Track Frame Width:	**150 MM**
Frame Height:	**41 MM**
Interlock Sightline:	**25 MM**
Glass Thickness:	**5 MM To 22 MM**
Max. Shutter Height:	**3500 MM**
Max. Shutter Width:	**2000 MM**
Locking Type:	**Single / Multi Point Locking**
Mosquito Net:	**In Shutter**
Roller Capacity:	**Up to 120 kg**



Eco Gulf Slim System

Ekka windows
Your Vision Our Frame

Discover how to enhance your home's aesthetics and natural light without exceeding your budget with the Eco Gulf Slim System. Designed specifically for the discerning homeowner, these windows feature sleek, minimalist profiles with narrow interlock sections, maximizing glass area and inviting an abundance of daylight into your living spaces. Perfectly suited for our local climate, the Eco Gulf Slim System combines modern design with smooth operation and long-lasting durability, making it a smart and affordable upgrade for any renovation or new construction project.

- More Natural Light
- Sleek Minimalist Look
- Ideal for Modern Homes
- Durable & Affordable

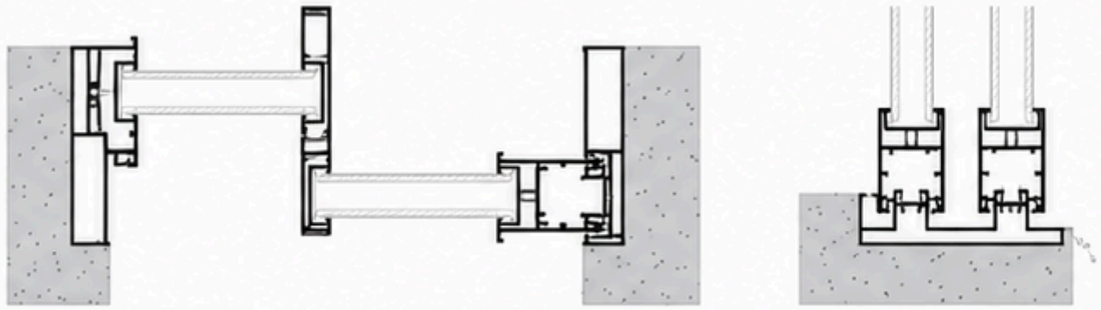

Technical Specification

2 Track Frame Width:	**83MM**
3 Track Frame Width:	**120MM**
Frame Height:	**41 MM**
Interlock Sightline:	**18 MM**
Glass Thickness:	**5 MM To 11.5 MM**
Max. Shutter Height:	**2100 MM**
Max. Shutter Width:	**1200 MM**
Locking Type:	**Single / Multi Point Lacking**
Mosquito Net:	**In Shutter**
Roller Capacity:	**Up to 80 kg**

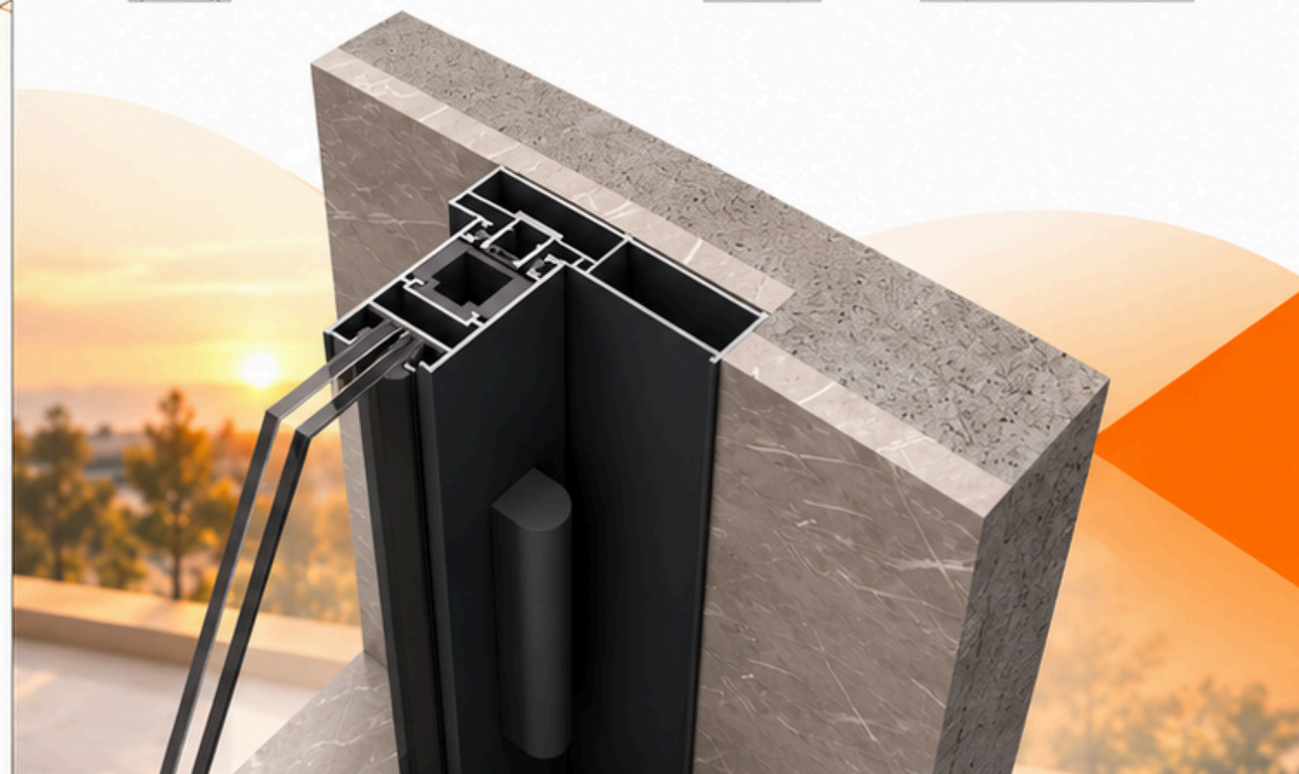



29 MM Euro Slim System

Experience sleek sophistication with the 29 mm Euro Slim Sliding Aluminium Window - designed for wider views, smooth glide, and timeless style. Perfectly crafted to bring in more natural light while maintaining strength, durability and modern aesthetics, it is an ideal choice for contemporary homes and premium spaces.

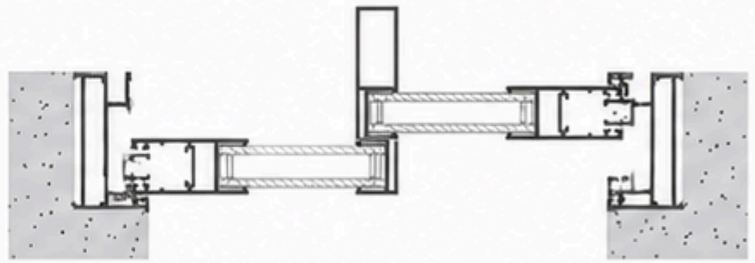

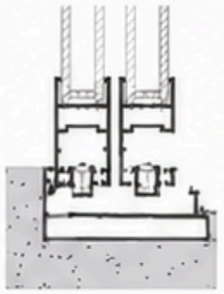

Technical Specification

2 Track Frame Width:	**65 MM**
3 Track Frame Width:	**100 MM**
Frame Height:	**51 MM**
Interlock Sightline:	**22.4 MM**
Glass Thickness:	**5 MM To 20 MM**
Max. Shutter Height:	**2400 MM**
Max. Shutter Width:	**1500 MM**
Locking Type:	**Multi / Single In**
Mosquito Net:	**Shutter**
Roller Capacity:	**200 / 400 kg Max**





25 MM Euro Slim System

Ekka windows
Your Vision Our Frame

Smart design. Strong performance. The 25mm Euro Slim Sliding System is engineered for modern commercial spaces that require durability, sleek aesthetics, and cost efficiency. Its slim frame enhances daylight and visibility while maintaining excellent strength, smooth operation, and long-lasting performance—making it the perfect balance between economy and elegance.

- Slim Sightlines
- Modern Aesthetics
- Smooth Operation
- Durable & Cost Efficient

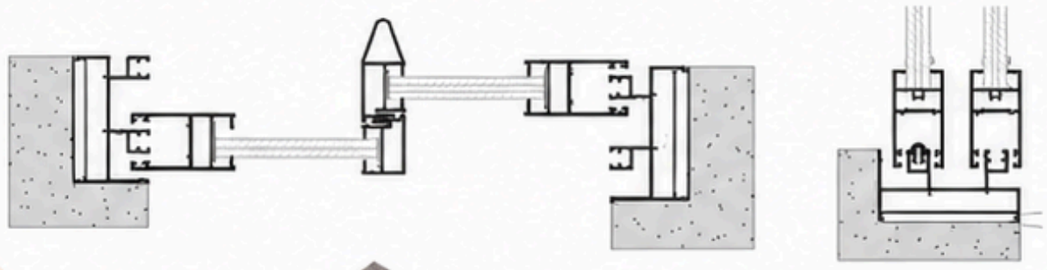

Technical Specification

2 Track Frame Width:	**69 MM**
3 Track Frame Width:	**92 MM**
Frame Height:	**40 MM**
Interlock Sightline:	**26 MM**
Glass Thickness:	**5 MM To 11.5 MM**
Max. Shutter Height:	**2100 MM**
Max. Shutter Width:	**1200 MM**
Locking Type:	**Single Point**
Mosquito Net:	**Yes**
Roller Capacity:	**Up to 80 kg**

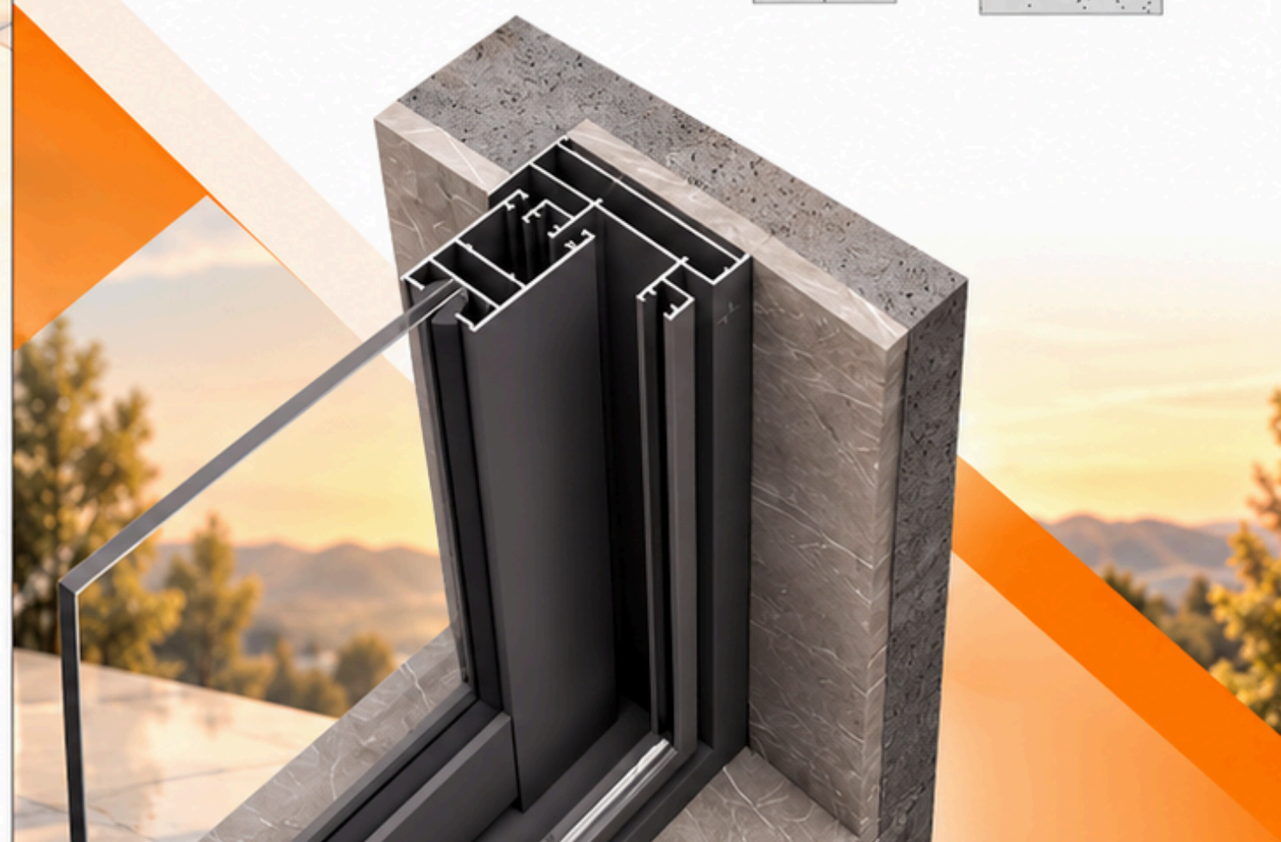



40 Casement Window

Smart solutions for compact spaces with the 40 Casement Window System. Designed to optimize ventilation and natural light even in the smallest openings, this system offers a practical and elegant solution for modern urban living. With its sleek, slim profiles, lightweight design, and easy operation, it provides efficient airflow, reliable security, and a clean, contemporary look. Ideal for kitchens, bathrooms, hallways, or any area with limited space, the 40 Casement Window combines functionality, durability and style to elevate your space.

Efficient Ventilation | **Ideal for Compact Spaces** | **Durable & Secure** | **Sleek & Lightweight**

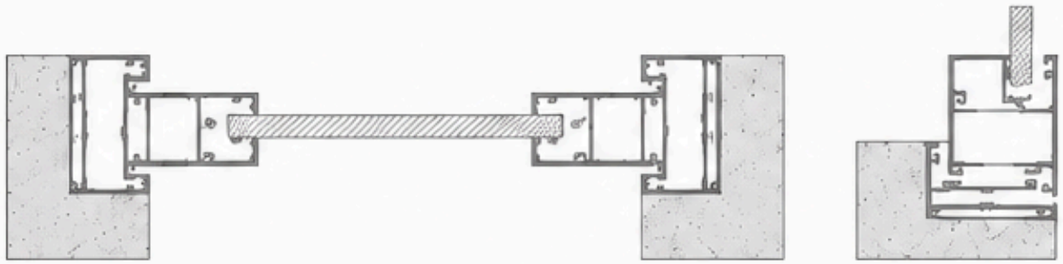

Technical Specification

Frame Width: Frame	**40 MM**
Thickness: Max.	**4 MM To 24 MM**
Shutter Height: Max.	**1900 MM**
Shutter Width:	**700 MM**
Locking Type:	**Multi / Single**

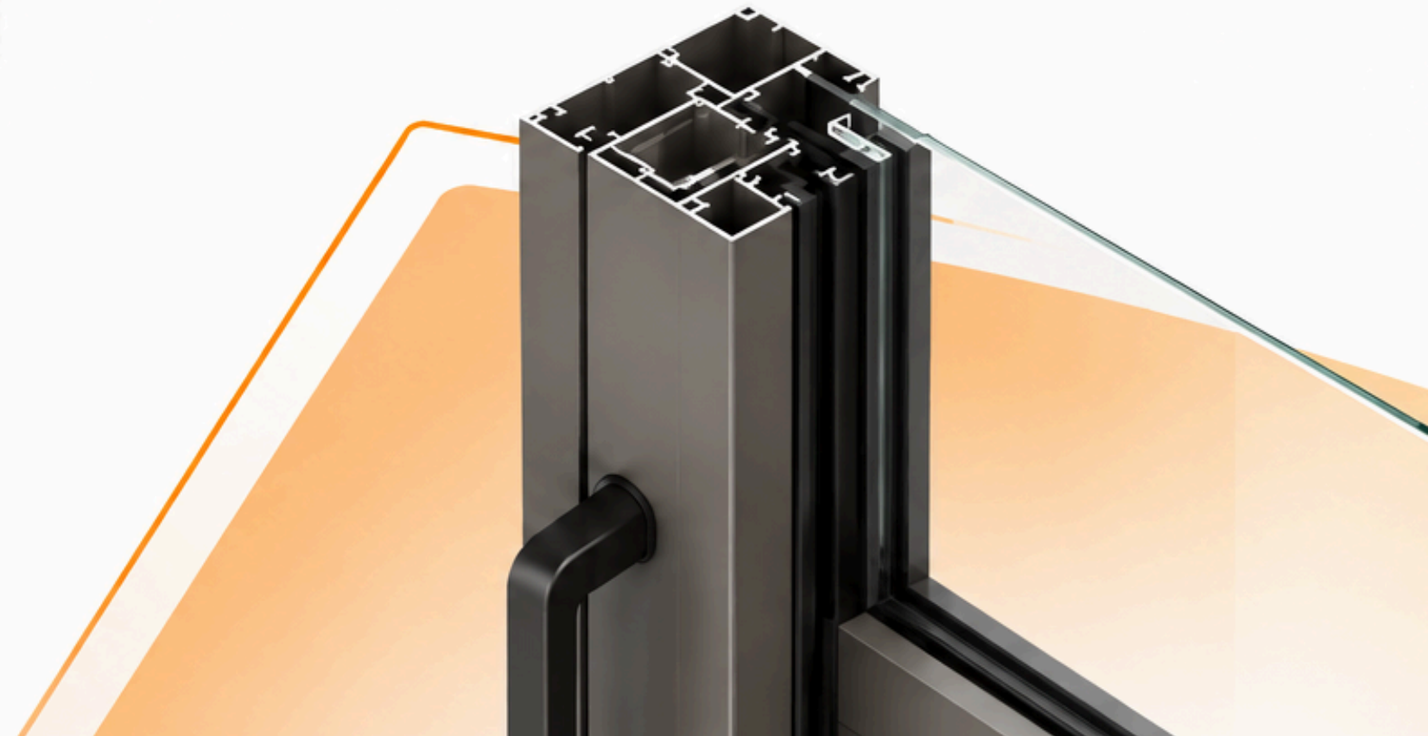



50 Casement Door

Grand Openings, Unyielding Performance. Our 50 Heavy-Duty Casement Door System is meticulously engineered to transform standard door openings into statements of both elegance and robust functionality. Designed for larger apertures where strength and a grand opening are paramount, these casement doors provide an impressive alternative to traditional sliding or hinged doors. Crafted with reinforced, heavy-gauge profiles and premium, high-performance hardware, they ensure exceptional stability, superior security, and long-term durability against the elements. Perfect for both residential and commercial applications, experience effortless, wide-swing operation that seamlessly connects your indoor and outdoor spaces, offering expansive views and an opulent feel without compromising on an airtight seal and unyielding structural integrity.

Wide Openings | **High Strength** | **Premium Aesthetics** | **Durable & Secure**

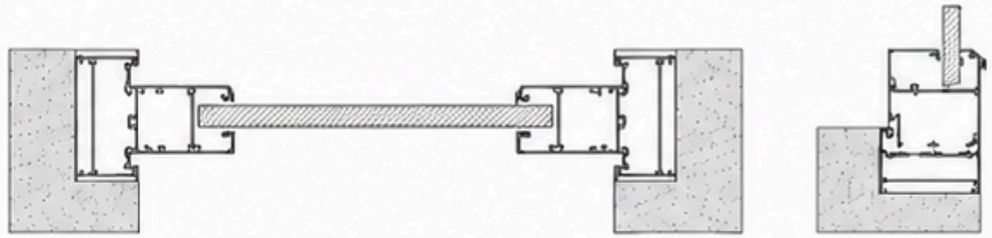

Technical Specification

Frame Width: Frame	**50 MM**
Thickness: Max.	**5 MM To 38 MM**
Shutter Height: Max.	**2500 MM**
Shutter Width:	**1350 MM**
Locking Type:	**Multi / Single**

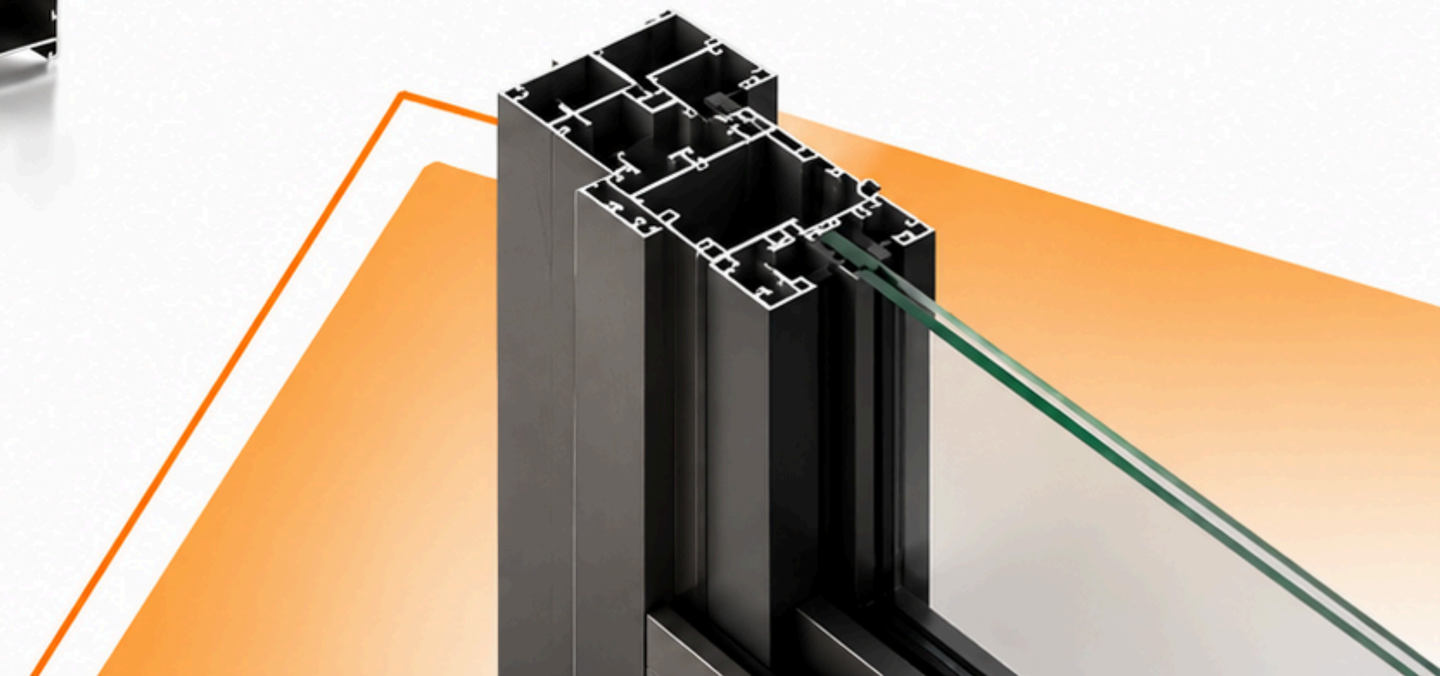

YOUR VISION, OUR FRAMES

LET'S CONNECT

Stay connected with Ekka Windows across all platforms
for the latest updates, inspiration and more.

WEBSITE

www.myekka.com

Visit our website to explore our products, solutions and more.

INSTAGRAM

@ekkawindows

Follow us for daily updates, projects, and design inspiration.

FACEBOOK

Ekka Windows

Like our page and be a part of our growing community.

LINKEDIN

Ekka Fenestration

Connect with us professionally and stay updated.

YOUTUBE

Ekka Windows

Subscribe to our channel for product videos, installations and more.

PREMIUM QUALITY | INNOVATIVE SOLUTIONS | TRUSTED PARTNER | CUSTOMER FOCUSED | BUILT FOR PERFORMANCE

Thank you for exploring Ekka Windows.

We are committed to delivering excellence, innovation and value
— framing better views, building a better tomorrow. ♥

Ekka™
Ekka windows
Your Vision Our Frame